F-SERIES OWNER'S MANUAL

F-Series
Skid Steer Flail Mower
Owner's Manual

BRUSH HOUND

VALLEY TOOL
MANUFACTURING COMPANY

PO Box 220 | 2507 Tully Road | Hughson, CA 95326 | 800-426-5615
www.valleytoolmfg.com

F-Series Skid Steer Flail Mower

Table of Contents

Introduction

Thank You	1
Warranty	2

Safety

Operational Safety	3
Maintenance Safety	4

Basic Operation

Attaching to Skid Steer	5
Starting Procedure/Running Attachment	6

Adjustments & Maintenance

Lubrication/Cutting Height/Replacing Knives	7
Front Caster Wheel/Cutting height	8
Cleaning Attachment	9
Transportation/Removal/Storage	10

Frequently Asked Questions

Questions & Answers	11

Parts Book

Specifications	13
Top Assembly	14
Pulley System	15
Belt Guard Assembly	16
Cutter Drum Assembly	17
Assembly Bearing Idle Hardware	18
Assembly Backroll Plate Left Hand	19
Assembly Backroll Plate Right Hand	20
Hydraulic Motor Assembly	21
Hydraulic Plumbing	22
Decals	23

Thank You

Dear Customer,

We appreciate your purchase of a BrushHound attachment. The purpose of this manual is to familiarize you with the operation, adjustment, and maintenance of your new attachment. It was meticulously designed and constructed in accordance with the highest industry standards to provide you with years of dependable service. Before endeavoring to operate the machine, you must read this manual thoroughly and comprehend its operation. BrushHound reserves the right to make modifications to design and specifications, as well as additions and enhancements to its product, without incurring any obligation to retrofit previously manufactured items. If you ever require additional information, please contact your authorized dealer or customer service.

PO Box 220 | 2507 Tully Road | Hughson, CA 95326
1-800-426-5615
www.valleytoolmfg.com

BrushHound designed this attachment with operator safety as one of its primary considerations. This attachment was designed with shielding, simple adjustments, and other safety features whenever practicable. Ensure that you and your employees read and comprehend this manual. Only responsible individuals who have been trained to operate in a secure manner and who have read and comprehend this manual should operate any machinery.

Before accepting the equipment, verify the pre-delivery checklist thoroughly with the sales representative. See pg.5

Ensure all operators have a comprehensive understanding of the operation, adjustment, and safety principles outlines in this manual.

BrushHound Attachments is soley owned by Valley Tool and Manufacturing.

Visit: www.valleytoolmfg.com

Product Registration

Warranty

Valley Tool & Mfg. warrants each product to be free of manufacturing defects for a period of twelve months (ninety days for rental units) from the date of delivery to the original user/owner, subject to the limitations stated in this policy.

This warranty does not apply to defects caused in whole or in part by unreasonable use while the product is in the user's possession, including but not limited to: failure to properly set up product; failure to provide reasonable and necessary maintenance; normal wear; routine tune-ups or adjustments; improper handling or accidents; operation at speed or load conditions contrary to published specifications; improper or insufficient lubrication; improper storage. This warranty also does not guarantee that the efficacy of every product will meet the purchaser's expectations.

Valley Tool & Mfg. shall not be liable for consequential damages of any kind, including, but not limited to, consequential labor costs or transportation charges associated with the replacement or repair of defective parts; lost time or expenses incurred as a result of said defects. Valley Tool & Mfg.'s total liability is limited to the purchase price of the product.

Valley Tool & Mfg. provides no warranty for trade accessories or any component or accessory of the product that was not manufactured by Valley Tool & Mfg., including any purchased components. These are subject to the respective manufacturer's warranties. If the product or any part of the product is modified or repaired in any manner not expressly authorized by Valley Tool & Mfg., or if closed components are disassembled prior to return, the warranty will be void. Closed components include gearboxes, hydraulic pumps, motors, cylinders, and actuators, among others.

Our obligation under the warranty is expressly limited, at our option, to the replacement or repair at Valley Tool & Mfg., of Hughson, California, or at a service facility specified by us, of the defective part or parts as determined by inspection.

We are not liable for unauthorized replacements or repairs. Warranty pre-approval is required. Authorized supplies will be sent to the dealer at no cost via UPS Ground. The duration of any implied or statutory warranties, such as warranties of merchantability or fitness for a particular purpose, is expressly limited to the duration of this written warranty. No one is authorized to make any other express or implied warranties on our behalf. This warranty cannot be extended, expanded, or altered unless authorized in writing by Valley Tool & Mfg. No warranty will be processed without a timely, signed "Product Registration"

The attachment owner is responsible for the travel time of mechanics and conveyance of the product to the authorized service dealer for warranty work.

The most reasonable and dealer-friendly return policy on the market is provided by Valley Tool & Mfg. The return policies for each of our brands are listed below. We accept returns within 30 days of the date of original shipment. Prior to return shipment, all returns must be approved by Valley Tool & Mfg, and a return authorization number must be issued. Returns must be in "like-new" condition and accompanied by all original factory packaging, including instruction manuals. If an item is received that is not in "like-new" condition or in its original packaging, additional fees will apply. After our staff has completed a thorough inspection of a return, refunds will be issued less shipping fees and any other potential damage fees. Please allow up to 30 business days for the processing of your account refund credit.

Please direct all return-related questions to sales@valleytoolmfg.com.

Safety

Safety messages are provided in this manual to describe possible risk during operation, maintenance and transportation. These messages are intended to convey known hazards but cannot be construed to describe all possible risks.

Signal words in Safety Messages:

⚠ DANGER

Danger: Indicates immediate risk of serious injury or death.

⚠ WARNING

Warning: Indicates possibility of serious injury or death.

⚠ CAUTION

Caution: Indicates possibility of minor injury.

NOTICE

Notice: Indicates possibility of property damage, possible machine failure but no immediate risk to personal injury.

Failure to heed any of these warnings may result in personal injury or death.

Operational Safety

Before operating this machinery read the owner's manual thoroughly. Properly train all Operators. It is the Owner's responsibility to ensure all Operators are properly trained in the appropriate language. Use OSHA approved eye, ear and head protection to protect the Operator from flying debris and noise. Never use drugs or alcohol before or during operation of this machine. Only operate this machine when it is in good working order on an appropriate power unit that is in good working order, and with all guards and safety devices in place and functioning. Never allow children or other people to ride on this machine.

⚠ DANGER

Keep bystanders and children of the clear work area during operation as debris can be discharged and cause serious injury or death. Maintain a minimum distance of 300 ft.

⚠ DANGER

Risk of death or injury if moving parts are touched, or are brought into contact with any person. Keep away from all moving parts. Keep guards in place while operating.
Operate only with clear visibility, never in dusty, foggy conditions or at night. Risk of collision or contact with personnel. Crushing, piercing or cutting hazard.

⚠ WARNING

Avoid operation that would allow hydraulic lines to be pinched or severed. In the event of a hydraulic leak, hydraulic fluid may have sufficient force to penetrate skin. Do not use any body part to check for leaks. High pressure oil can cause severe injury or death.
Disengage hydraulics, shut off engine and allow all movement to stop before leaving the operator's position to adjust, lubricate, clean or unclog the machine. Do not try to uncouple hydraulic hoses unless the pressure has adequately dissipated.
Risk of serious injury or death due to thrown debris or broken knives. Do not operate closer than 300 ft to people, unprotected roadways or public areas without properly securing or warning protecting against accidental ingress. Risk of fire due to knife contact with stones, concrete, steel or other hard objects. Sparks can ignite dry grass, wood chips or other flammable material. Do not operate in dry grass, severe fire risk areas or in an area actively burning or recently burned. Consult local requirements around operation during Fire Weather Watch or Red Flag Warning conditions.

⚠ CAUTION

Rotating parts, Hydraulic hoses, motors and valves generate heat when operating. Do not touch when hot. Allow to cool before maintaining.
Risk of crushing, pinching or cutting due to motion of machine while maintaining. Ensure all energy is dissipated from hydraulic lines before maintaining. Secure power unit and attachment against motion with wheel chocks, or appropriately sized stands as required.
Remove key from power unit and read manual before maintaining. Risk of accidental motion if key is engaged on power unit. Knives wear parts and damaged components can have sharp edges that cause cuts or lacerations. Wear protective gear and handle these parts with care.

Basic Operation

Pre-Delivery Checklist

- ☐ Check all nuts and bolts for correct torque.
- ☐ Check for shipping damage. If damaged, do not use the attachment until parts have been replaced or repaired.
- ☐ Check that all hydraulic hoses and fittings are tight.
- ☐ Check that all warning signs (decals) and safety treads are on the attachment and in their correct location. Replace any damaged signs or safety treads.

Attaching to Skid Steer

NOTICE

Make sure all hydraulic hoses are clear of the front mounting plate before connecting the attachment.

- Align the skid-steer quick-attach plate with the mower mounting plate.
- Tilt forward and "scoop" into the mower's attachment frame.
- Tilt back until plates lock together.
- Engage locking pins fully.
- Attach hydraulic hoses:
  - Pressure
  - Return
  - Case Drain
- Set the Power Unit to the "Hydraulic Breaker Mode" (one-way flow). If this mode or one-way flow isn't available on the Power Units, case drain required.

NOTICE

Operation without case drain will result in motor failure.

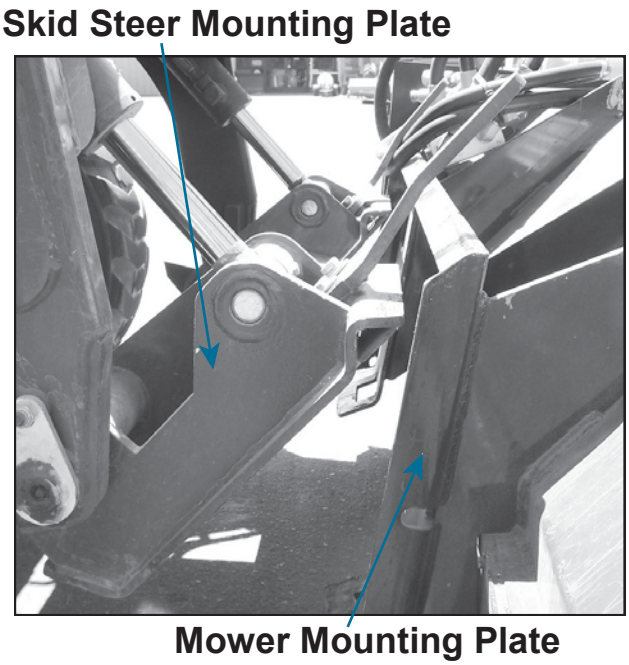

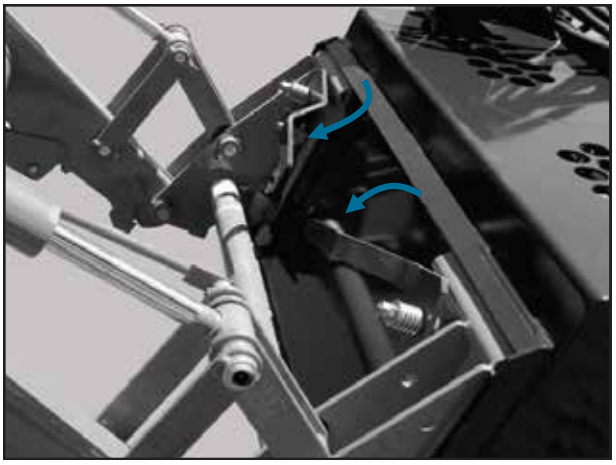

Starting Procedure

NOTICE

Do not start the operating vehicle until mower has been carefully checked for correct assembly and installation.

- Check to see that the mower is in the down position and blades are not touching the ground.
- Start the engine.
- Set throttle at idle speed.

NOTICE

Do not engage auxiliary flow hydraulics at a high engine speed.

- At Low RPM, turn on the auxiliary flow hydraulics.
- Slowly bring up the RPM to operating speed.

NOTICE

If vibrations occur, disable auxiliary hydraulics and shut the machine down immediately. Determine and correct the problem before continuing work.

- When work is finished, disable auxiliary hydraulics, shut off power unit, set parking brake and check hydraulic motor, motor protection valve and other areas for excess heat or leaks.

⚠ CAUTION

Do not touch the motor or other hot areas with bare skin.

Running The Attachment

- Suggested ground speed: 0-5 mph
- Keep mower level so the gauge roller carries the weight.
- Slight upward tilt can mulch larger brush.

⚠ WARNING

Do not raise the mower high enough for blades to be visible.

- Skid shoes should not ride constantly on the ground.

Cutter Drum Rotation
Two Operational modes:

Re-Cut Mode (reverse of wheel rotation) Standard
- Cuts material multiple times
- Highest shredding quality
- Requires more horsepower.

One-Cut Mode (same as wheel rotation) Optional
- Faster travel speed
- Lower fuel use
- Cuts material once

Adjsutment & Maintenance

⚠ CAUTION

Before Servicing:

- Wait for all movement to stop before leaving the operator seat.
- Block both sides of the vehicle tires and both ends of the mower before working under or around it.
- Remove the ignition key and ensure all motion has fully stopped before starting any work.

Lubrication

- 6 grease points
- (Cutter drum bearings and back gauge roll bearings).
- Grease every 50 hours.
- Avoid over-greasing.

Knife Replacement

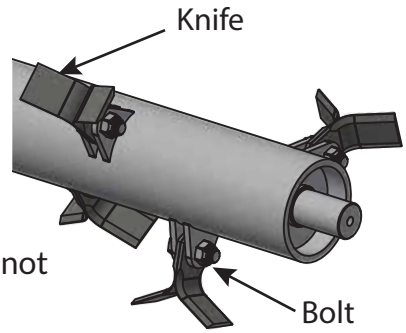

- Remove bolt.
- Replace knife.
- Tighten Bolt, Do not over-torque.
- Ensure free-swinging knife.

Maintenance Table

LUBRICATION	GREASE	HRS
Backroll Bearings	NLGI 1.5 ISO VG 460	50
Drum Bearings	NLGI 1.5 ISO VG 460	50
Caster Bearings	NLGI 1.5 ISO VG 460	50

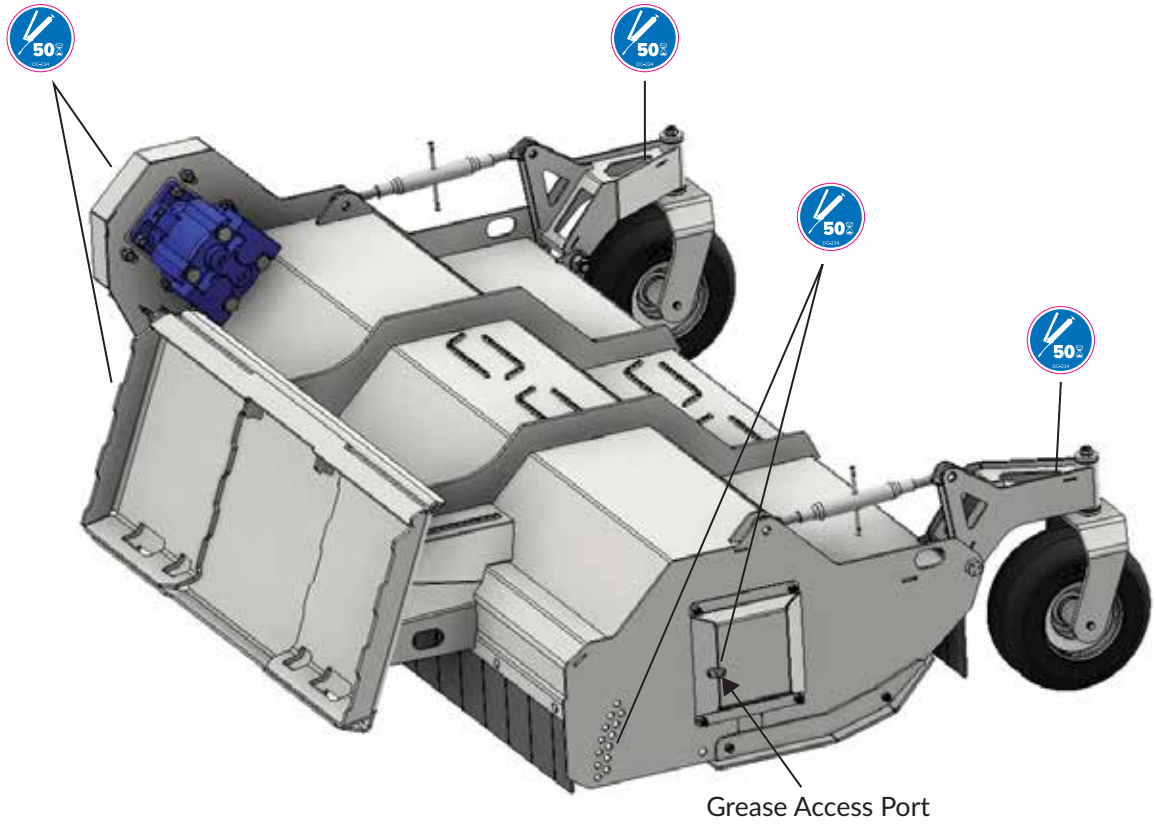

Front Caster Wheels

- The front caster wheels are designed to help follow ground variations without scalping.
- Wheels help provide a uniform height of cut.
- To adjust, turn the turnbuckles and set the jam nut on the bottom of the turnbuckle to the minimum height desired.
- Extending the turnbuckle will raise the mower and shortening it will lower it. Adjust wheels for a level cut.

Cutting Height Adjustment

- Adjust rear gauge roller by removing bolts and sliding plate up/down.
- Use skid-steer tilt to fine tune final height.
- Height range: 0-6 inches.

Belt Adjustment

- Tighten idler adjusting rod until belt deflection is 3/8 in with 5-6 lbs force.
- Re-tension new belts after first 1-2 hours.

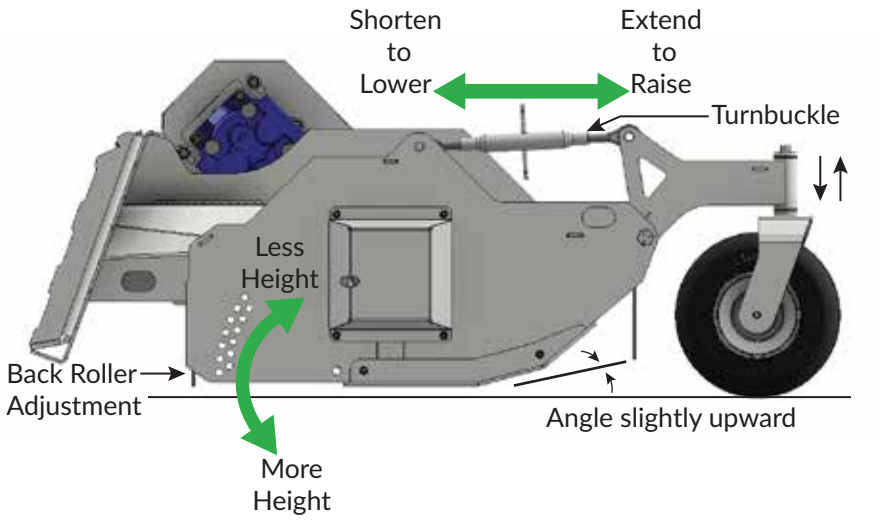

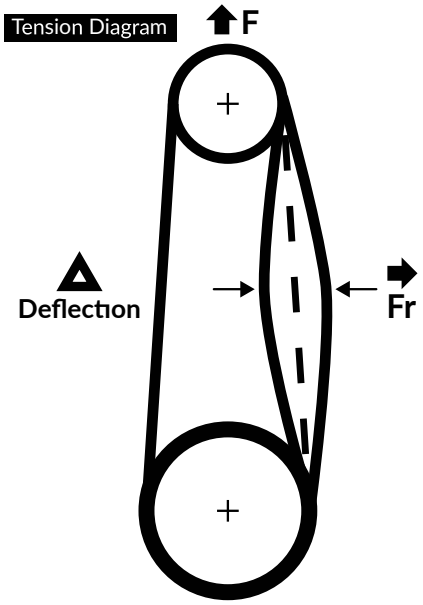

	NEW	USED
F =	788 - 844 lbf.	675 - 731 lbf.
Δ =	⅜" Deflection	⅜" Deflection
Fr =	6.3 - 6.7 lbf.	5.4 - 5.8 lbf.

Adjustments & Maintenance

Cleaning Attachment

- Pressure-wash inside mower housing.
- Remove mud and compacted grass from cutter drum.
- Do not allow grease into belt area.
- Keep decals readable; replace if damaged.
- Remove debris from hydraulic components.

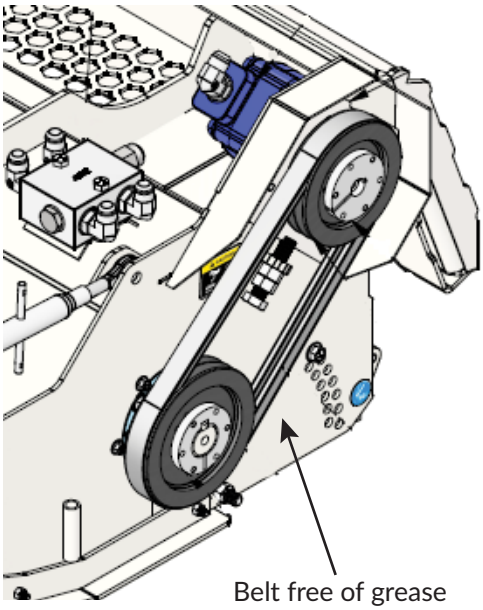

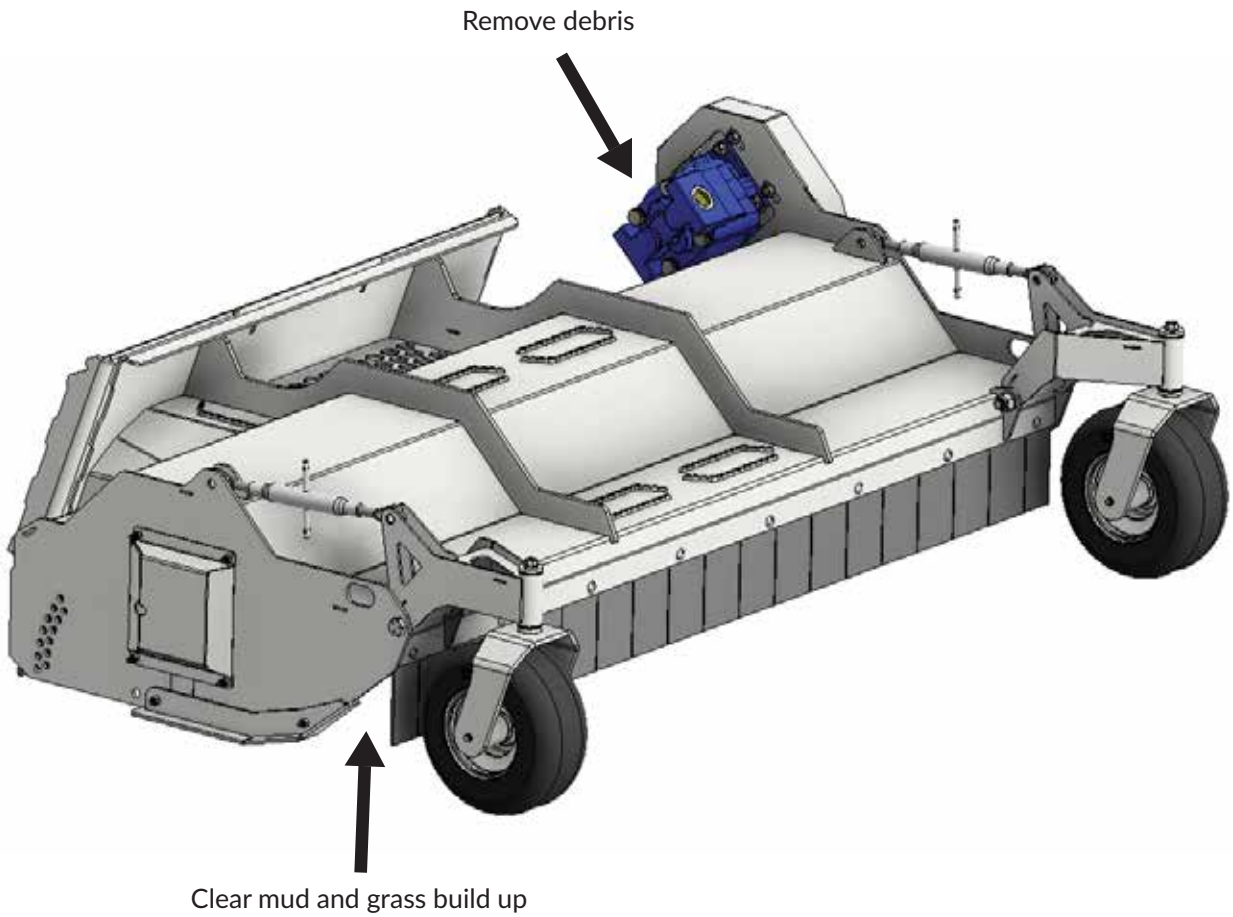

NOTICE

Shut off the engine and wait for all movement to stop before leaving the operator's seat. Block the mower and vehicle tires before working under or around the machine, and remove the ignition key. For transport, disengage auxiliary hydraulics and lower the mower to a safe travel height.

Transport

- Lower Mower.
- Disengage hydraulics.
- Maintain safe travel height.

Removal

- Lower the mower all the way onto the ground.
- Release skid-steer locks
- Tilt plate to disengage.

Storage

- Clean the mower thoroughly.
- Relax belt tension.
- Grease all fittings.
- Check for worn parts and replace so attachment will be ready to operate when necessary.
- Store in a clean, dry place.

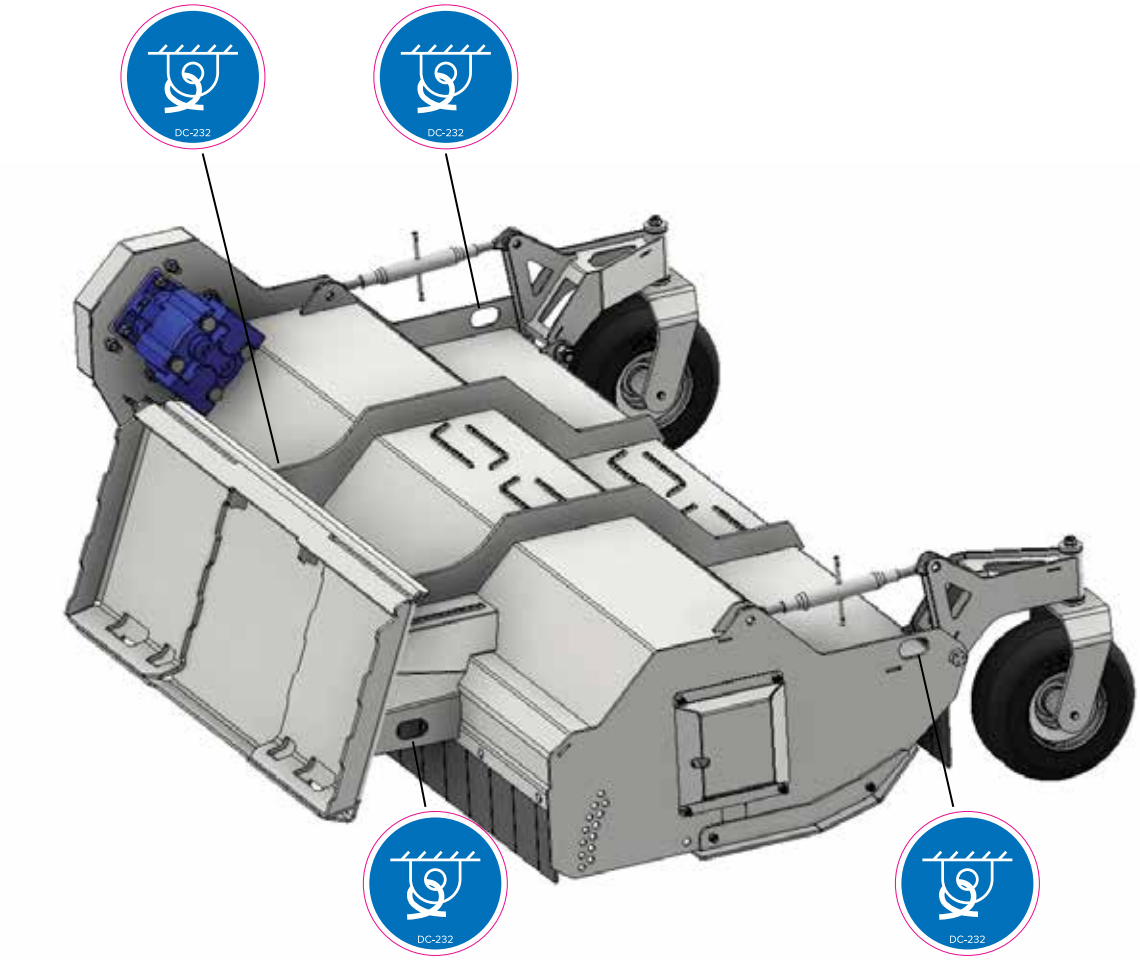

Frequently Asked Questions

Q. Where is the serial number located?
A. The serial number plate is located on the top of the mower.

Q. **Where are replacements parts sold?**
A. Check local dealer or ask to order from Valley Tool.

Q. **How often should knives be replaced.?**
A. When the cut begins to be inconsistent or rough, consider replacing the knives. It is recommended to keep an extra set of knives on hand to reduce downtime.

Q. **How often should belts be replaced?**
A. If experiencing repeated slipping, excessive heat or belt failure, increase belt tension. If this does not remedy the problem, replace the belt. Consider having an extra belt on hand.

Q. **Does the hydraulic motor need to be filled with fluid before use?**
A. No, attachments are tested at the factory prior to shipment and are full of high quality hydraulic fluid.

Q. **What should be done if belts are wearing out too fast and burning up?**
A. Check belt tension (about 3/8" of deflection) and adjust as needed. If slipping continues, raise the cutting height and slow travel speed, especially when mowing grass over two feet tall.

Q. **How to prevent hydraulic hoses from coming off during operation?**
A. Make sure the hoses are pressed all the way in their corresponding fittings on the operating vehicle. Turn the female coupler collar past the bump to lock. Give them a slight tug to make sure they are fully engaged.

Q. When replacing hydraulic fluid, how much should be added?
A. Consult power unit's maintenance manual for fluid levels and information.

Q. **Are there any advantages to reversing cutter drum rotation?**
A. Reversing drum rotation can extend knife life, but may throw debris toward the operator. Use only if safe, BrushHound recommends reverse rotation (opposite tire direction) to keep debris away from the operator.

Q. **How to reverse cutter drum rotation?**
A. Simply take the two hoses coming from the motor protection valve to the hydraulic motor and switch them.

Q. **How to replace knives?**
A. Refer to the Adjustments and Maintenance Section for a detailed explanation how to replace your knives.

Q. **When connecting hydraulic hoses, is there a specific way they should be attached or can any hose go to any fitting on the operating vehicle?**
A. One hose has a female end and the other hose has a male end. The female hose attaches to the male fitting on the operating vehicle and the male hose attaches to the female fitting on the operating vehicle.

F Series Skid Steer Flail Mower
Parts Book

VALLEY TOOL
MANUFACTURING COMPANY

Order Parts Online
shop.valleytoolmfg.com

- *Shop OEM Parts*
- *Fast Shipping*
- *Easy Checkout*

QUESTIONS: Parts@Valleytoolmfg.com

Specifications

MODEL	48F	60F	48F
Cutting Width	46”	58”	72”
Overall Width	56”	68”	80”
Machine Weight	800 lbs	830 lbs	861 lbs
Cutting Height	0-6”	0-6”	0-6”
Number of Knives	18 Industrial	24 Industrial	30 Industrial
Auxiliary Flow	8-27 GPM	8-27 GPM	8-27 GPM
Capacity	1”	1”	1”
Case Drain Required	Yes	Yes	Yes

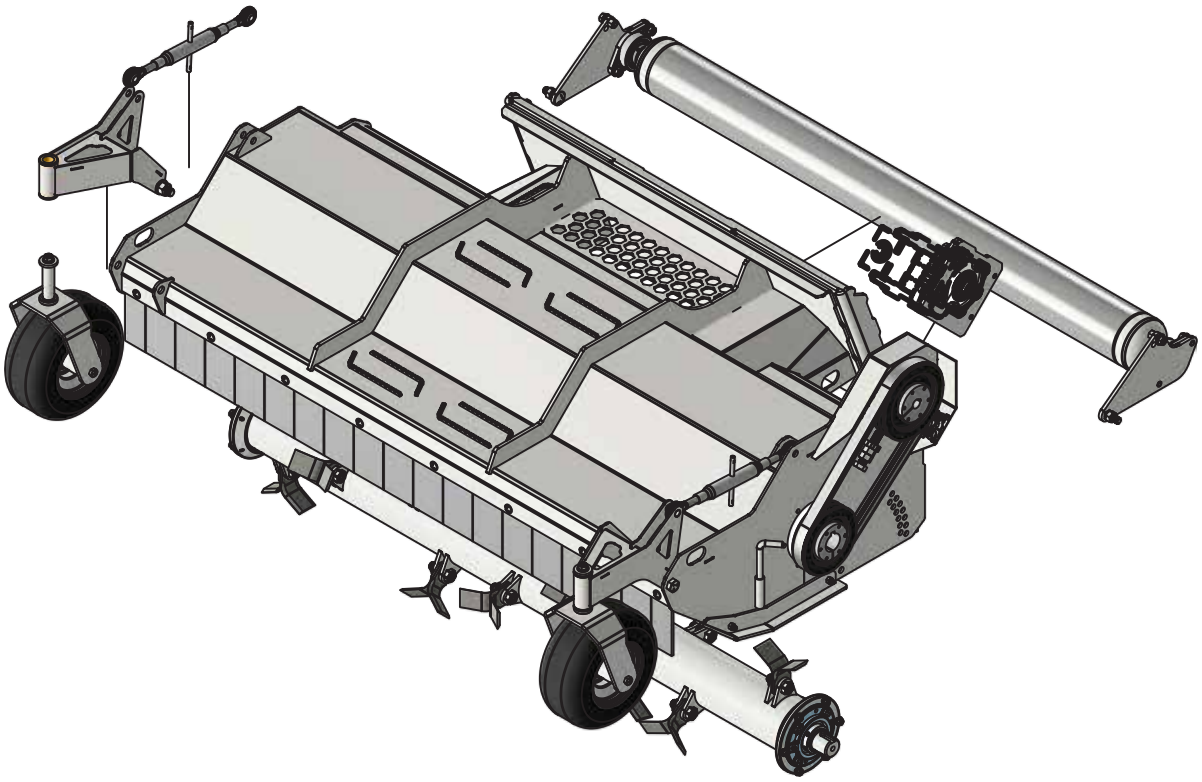

Top Assembly

ITEM	DESCRIPTION	PART NUMBER	QTY
1	ASY CD 48F-V2 DRUM WITH KNIVES	11398	1
	ASY CD 60F-V2 DRUM WITH KNIVES	11928	1
	ASY CD 72F-V2 DRUM WITH KNIVES	09363	1
2	ASY SHIELD 48F-V2	11402	1
	ASY SHIELD 60F-V2	11931	1
	ASY SHIELD 72F-V2	09367	1
3	CASTER WHEEL	09934	2
4	LH WK FRM W/ HARDWARE	09940	1
5	RH WK FRM W/ HARDWARE	09941	1
6	BEARING DRIVE HWR FV2	10023	1
7	BACK ROLL 48F V2	11411	1
	BACK ROLL 60F V2	11935	1
	BACK ROLL 72F V2	10974	1
8	ASY MTR MTG BLT TNSR F-SERIES V2	10014	1

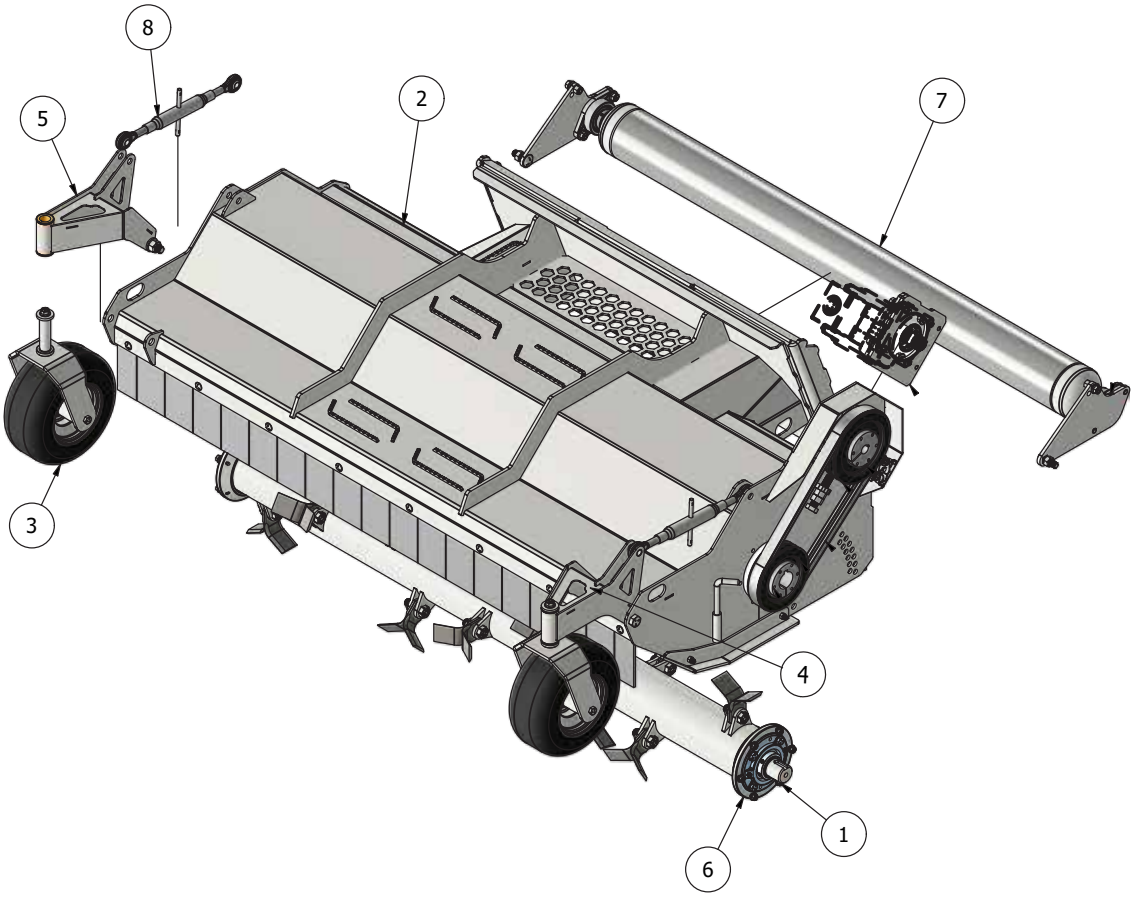

Pulley System

ITEM	DESCRIPTION	PART NUMBER	QTY
1	BUSHING SK 1 15/16 WD	SK-1 15-16	1
2	SHEAVE QD 8in 2/5V8.0	2/5V8.00	1
3	BELT 2/5VX550 2 BANDED 2/5VX550	2/5VX550	1
4	SHEAVE 7.1in	2/5V7.10	1
5	BUSHING SK 1 IN QD	SK-1	1
6	ASY MTR MTG BLT TNSR F-SERIES V2	10014	1

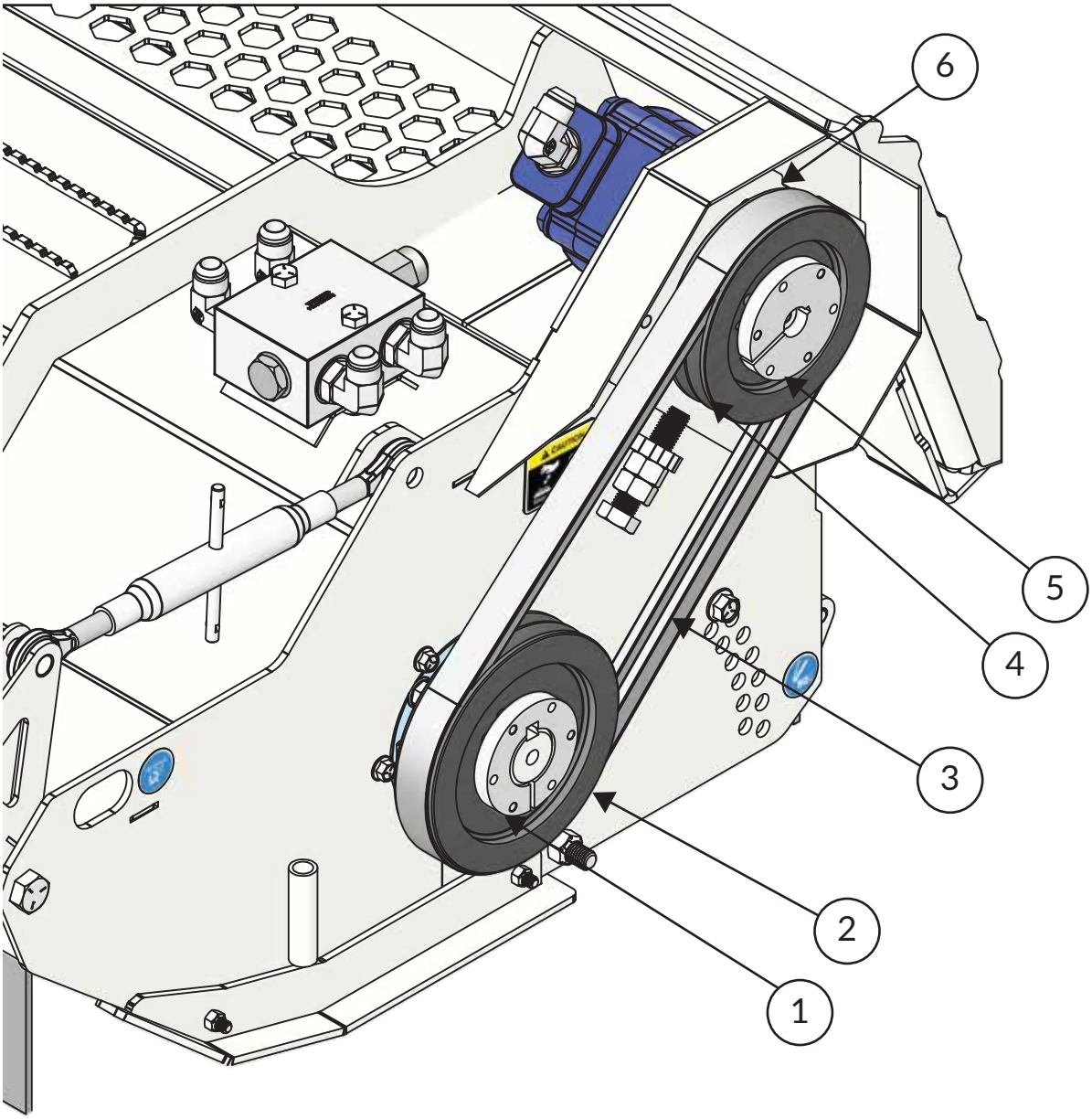

Belt Guard Assembly

ITEM	DESCRIPTION	PART NUMBER	QTY
1	COVER PULLEY	09925	1
2	HINGE 1 BELT GUARD FOR 5/8 ROD	09927	1
3	BELT HINGE ROD F-SERIES BELT GUARD	09929	1
4	HINGE 2 BELT GUARD 5/8 ROD	11406	1
5	HINGE 2 ROD F-SERIES BELT GUARD	11410	1

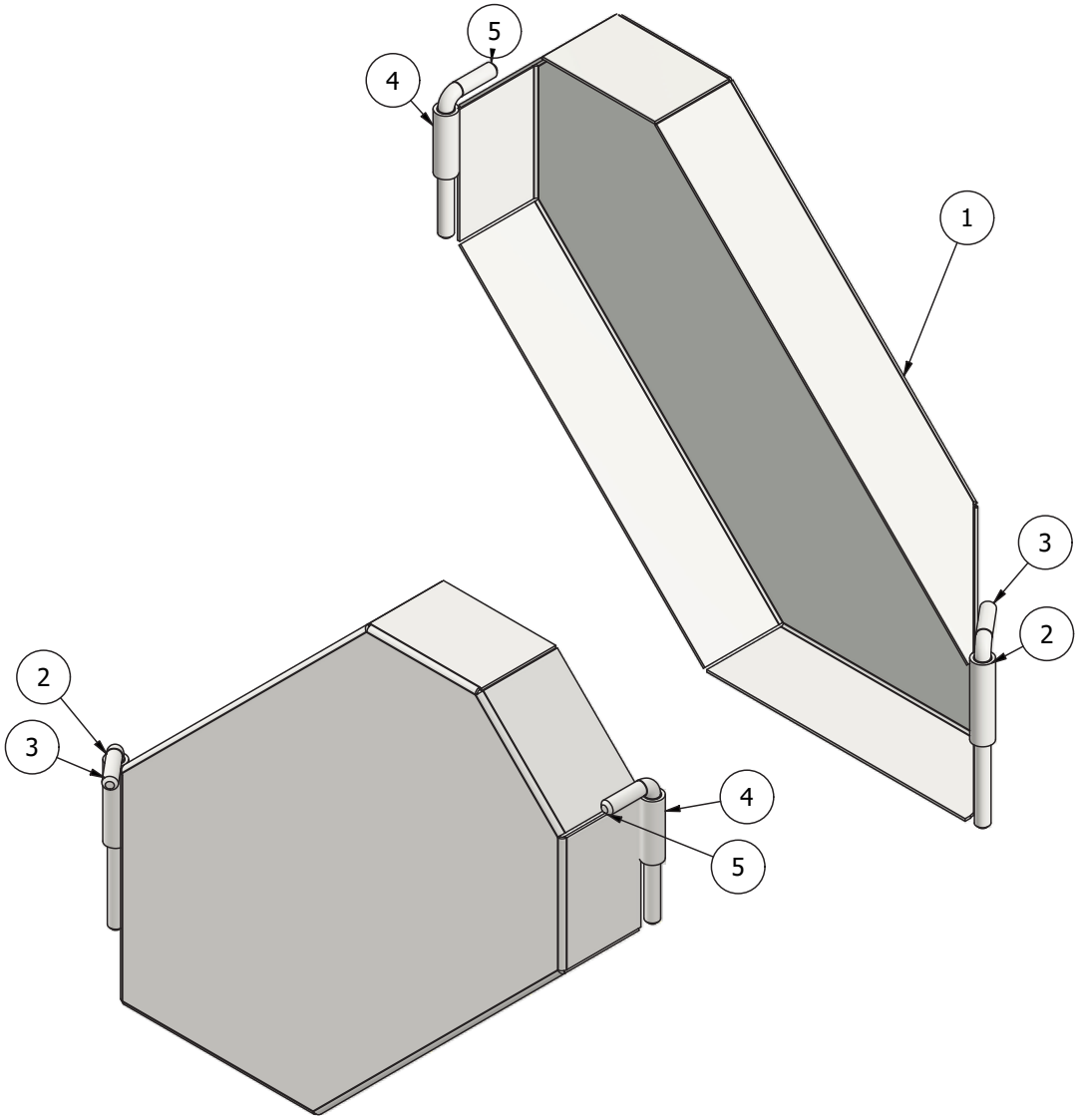

Cutter Drum Assembly

ITEM	DESCRIPTION	MODEL	PART NUMBER	QTY
1	ASY CUTTER DRUM 72F-V2	72	09364	1
	ASY CUTTER DRUM 60F-V2	60	11399	1
	ASY CUTTER DRUM 48F-V2	48	11399	1
2	HHCS 3/4-10 X 2.25 GR8 YLZN	72	92620A846	15
		60		12
		48		9
3	LKNUT 3/4-10 GR8 YLZN	72	99291A180	15
		60		12
		48		9
4	KNIFE INDUSTRIAL FLAIL	72	CD-2700	30
		60		24
		48		18

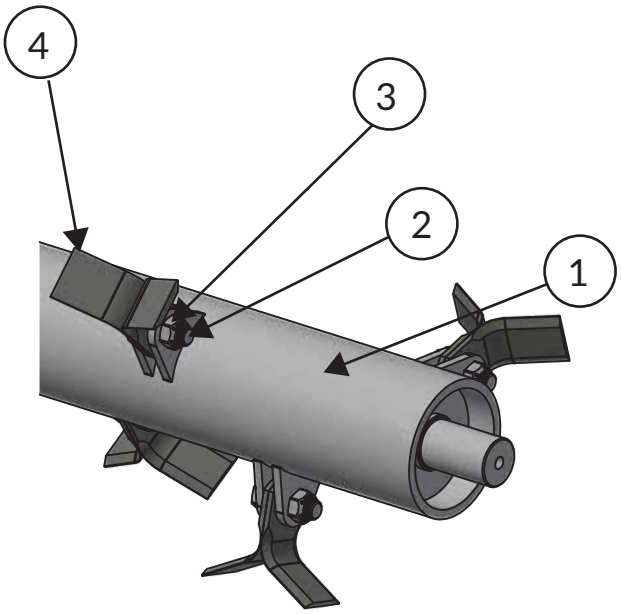

Bearing and Hardware Assembly

ITEM	DESCRIPTION	PART NUMBER	QTY
1	WIRE GUARD S-100 FOR 5IN PIPE	09005	1
2	BOLT HHCS 1/2-13 X 1	92865A712	4
3	FHCS 3/8-16 X 1.0 UNC GR5 CLZ	92979A344	6
4	BEARING 1 15/16 SPHERICAL	CD-115	1

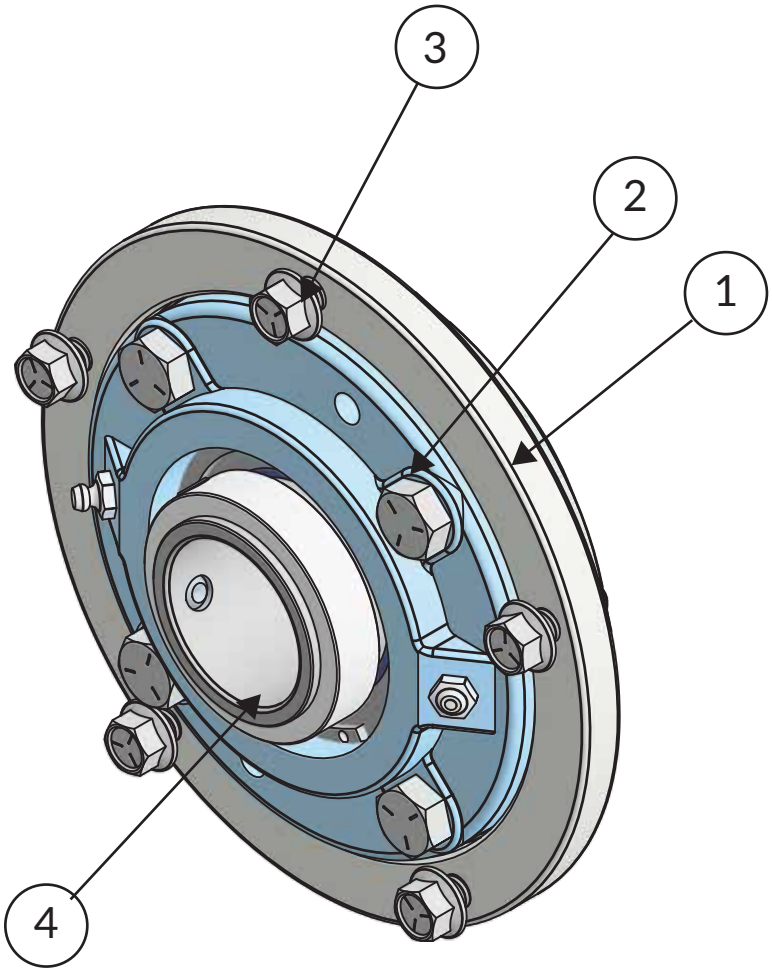

Back Roll Plate Left Hand Assembly

ITEM	DESCRIPTION	PART NUMBER	QTY
1	PLATE BACK-ROLL S-100	10418	1
2	BEARING, 1 1/4"	BR-207RH	1
3	BOLT CARRIAGE 5/8 X 2 GR5	90185A810	1
4	FHCS 1/2-13 X 1.25 GR5 CL ZN	90129A127	1
5	Locknut, Black-Oxide Steel, Grade 5, 1/2"-13	90673A104	1
6	LKNUT 5/8-11 DSTR THR CLZN	95065A220	1
7	FHCS 1/2-13 X 1.0 GR5	90129A126	2

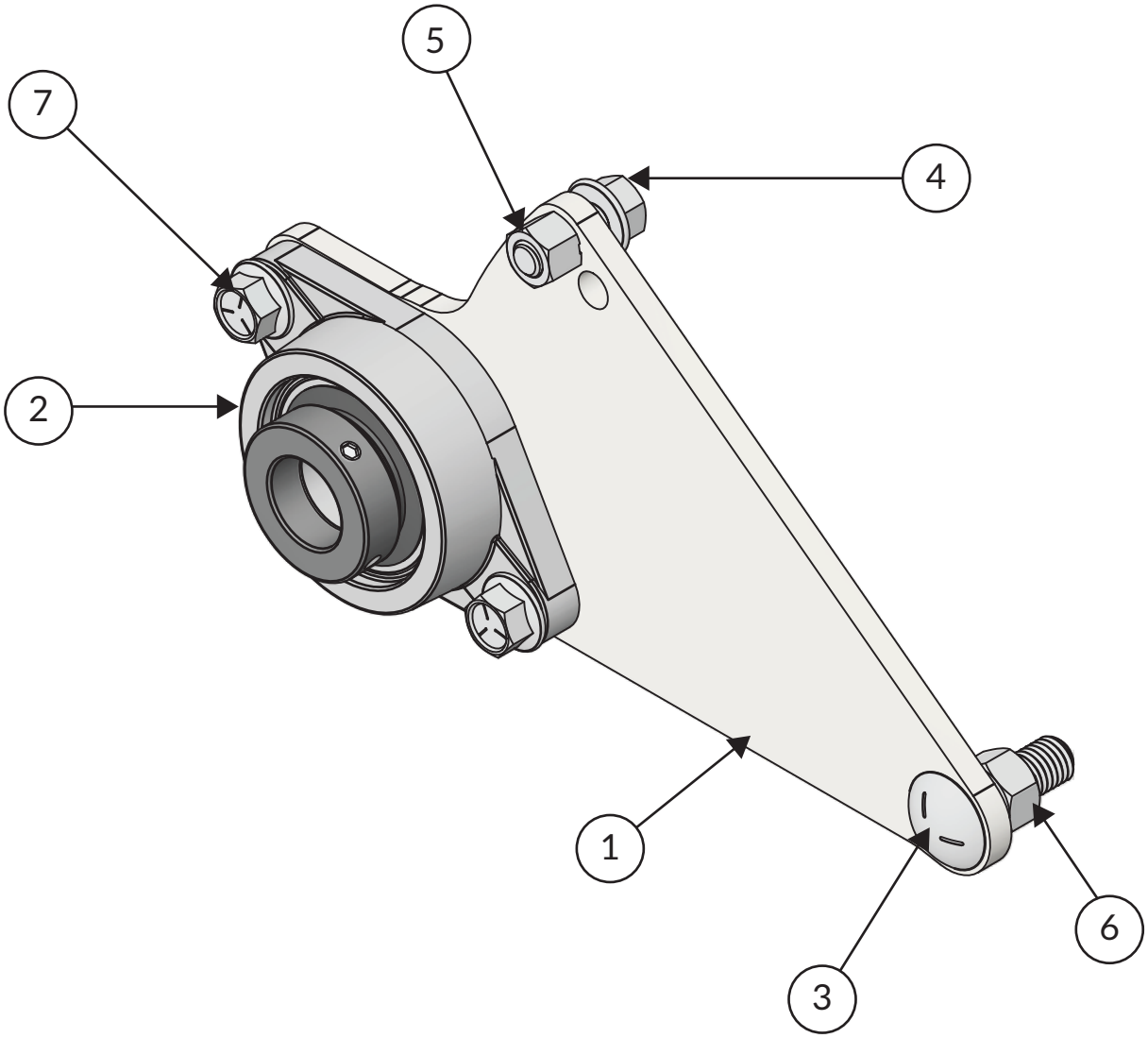

Back Roll Plate Right Hand Assembly

ITEM	DESCRIPTION	PART NUMBER	QTY
1	PLATE BACK-ROLL S-100	10418	1
2	BEARING, 1 1/4"	BR-207RH	1
3	BOLT CARRIAGE 5/8 X 2 GR5	90185A810	1
4	FHCS 1/2-13 X 1.25 GR5 CL ZN	90129A127	1
5	Locknut, Black-Oxide Steel, Grade 5, 1/2"-13	90673A104	1
6	LKNUT 5/8-11 DSTR THR CLZN	95065A220	1
7	FHCS 1/2-13 X 1.0 GR5	90129A126	2

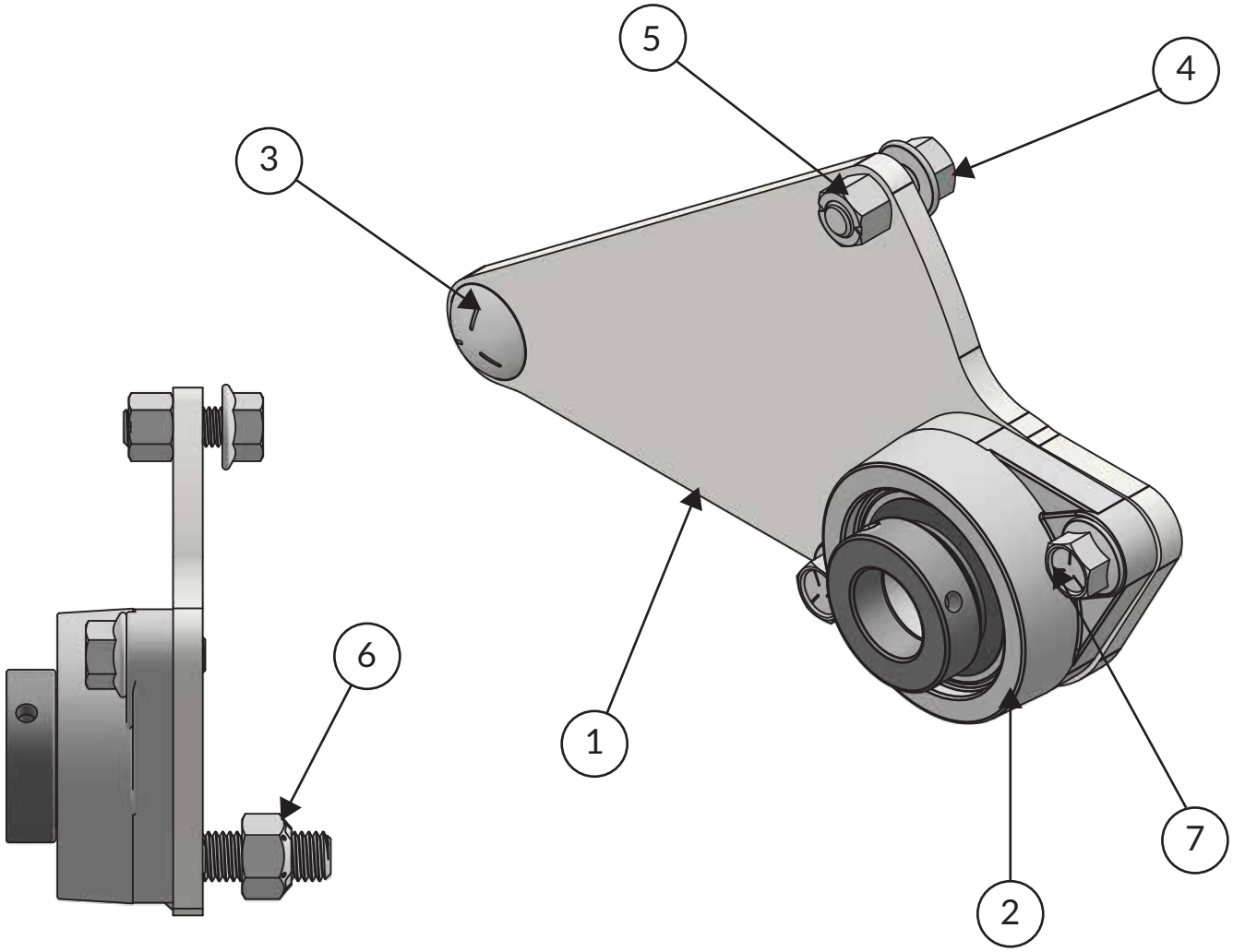

Hydraulic Motor Assembly

ITEM	DESCRIPTION	PART NUMBER	QTY
1	6801-NWO-FG-MJ-MAORB 90° Elbow	HY-2520	2
2	SHAFT 1.00	HY-2406	1
3	MOTOR GEAR 35CC	HY-2500	1

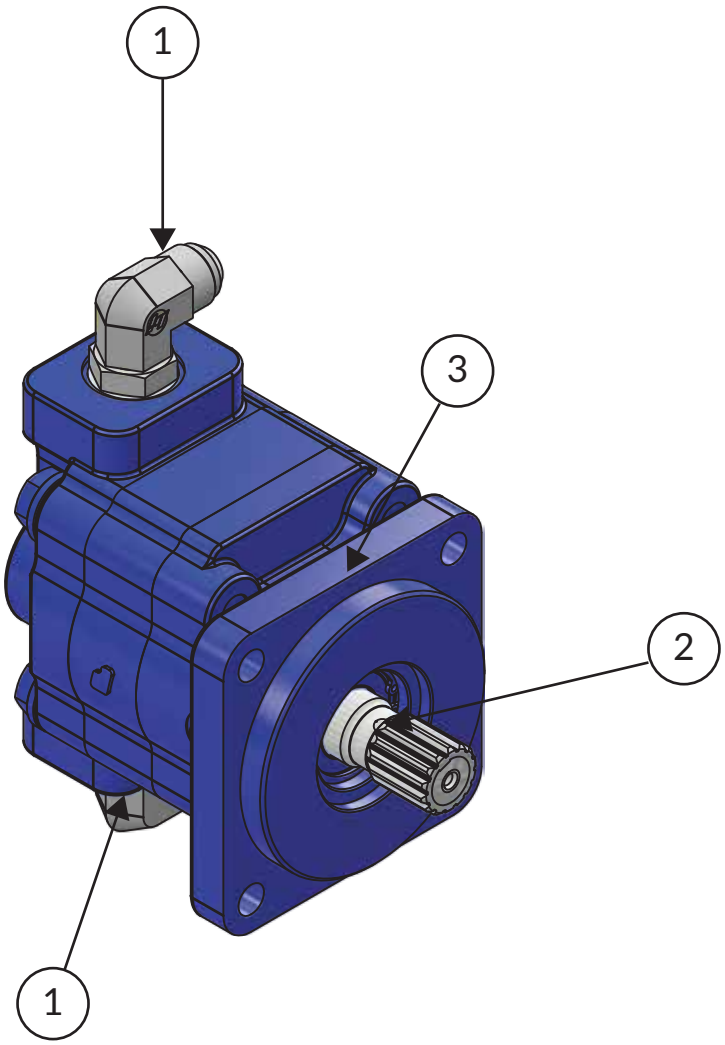

Motor Protection Valve Assembly

ITEM	DESCRIPTION	PART NUMBER	QTY
1	BODY MP VLAVE	HY-2450A	1
2	CHECK VALVE MPV	HY-2450C	1
3	PRESS RELIEF MPV	HY-2450B	1
4	90° ELBOW	HY-2520	4
5	LNKNUT 1/2-13 TOP LK DIST THR	95065A220	2
6	HHCS 1/2-13 x 3.25 GR5 CLZN	91247A725	2

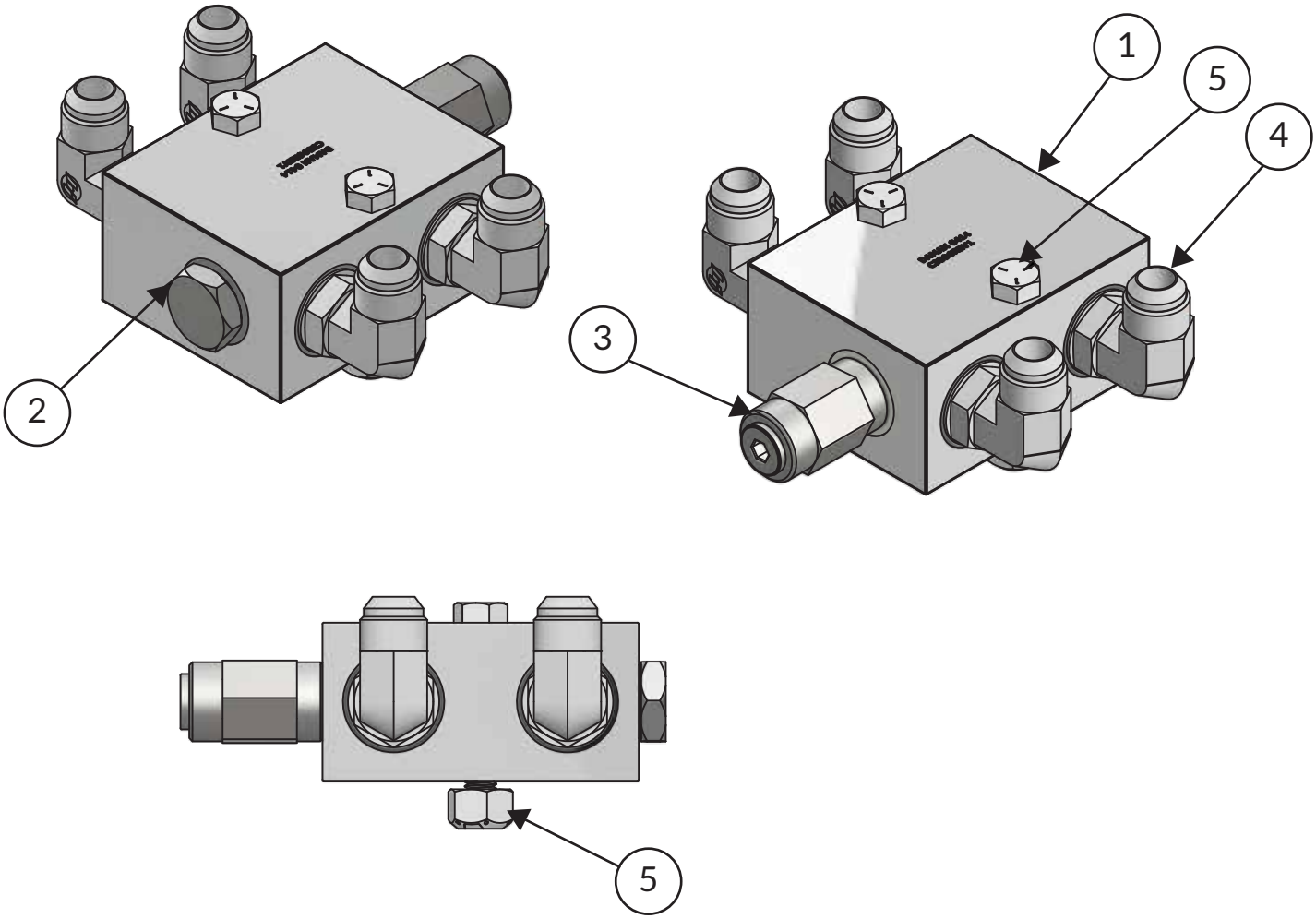

Decals

DC-116 (1) 	DC-108 (1) 	DC-115 (1)
DC-220 (1) 	DC-363 (4) 	DC-296 (2)
DC-262 (1) 	DC-268 (1) 	DC-232 (4)
DC-234 (6) 	DC-308 (1) 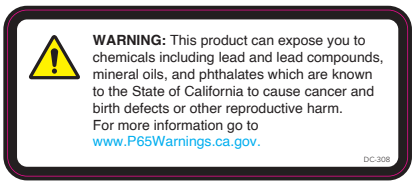	DC-354 (1)

F-Series
Skid Steer Flail Mower
Owner's Manual
REV: 261019

BRUSH HOUND

F-SERIES OWNER'S MANUAL

VALLEY TOOL
MANUFACTURING COMPANY

PO Box 220 | 2507 Tully Road | Hughson, CA 95326 | 800-426-5615
www.valleytoolmfg.com